REVISIONS				
ZONE	REV.	DESCRIPTION	DATE	APPROVED

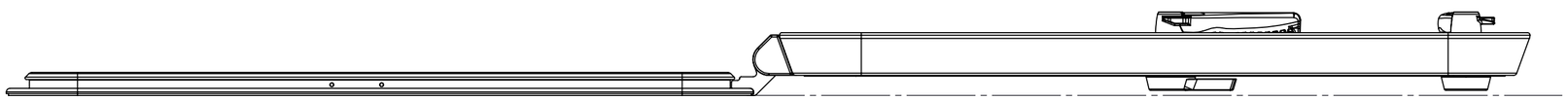

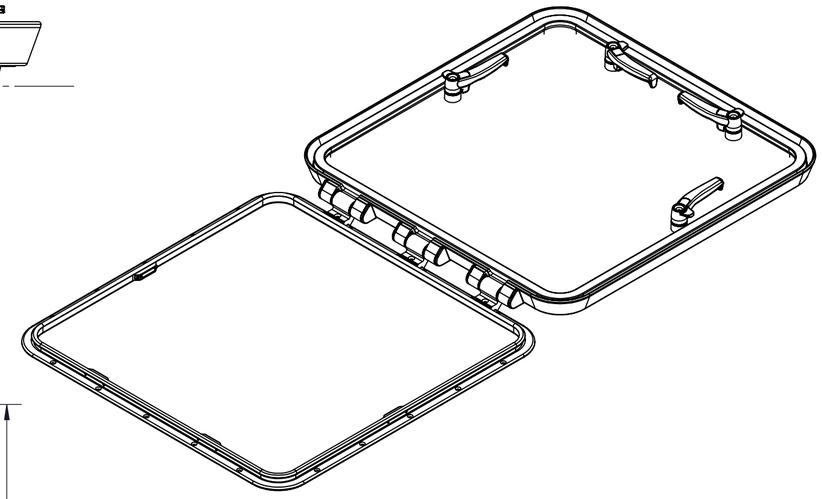

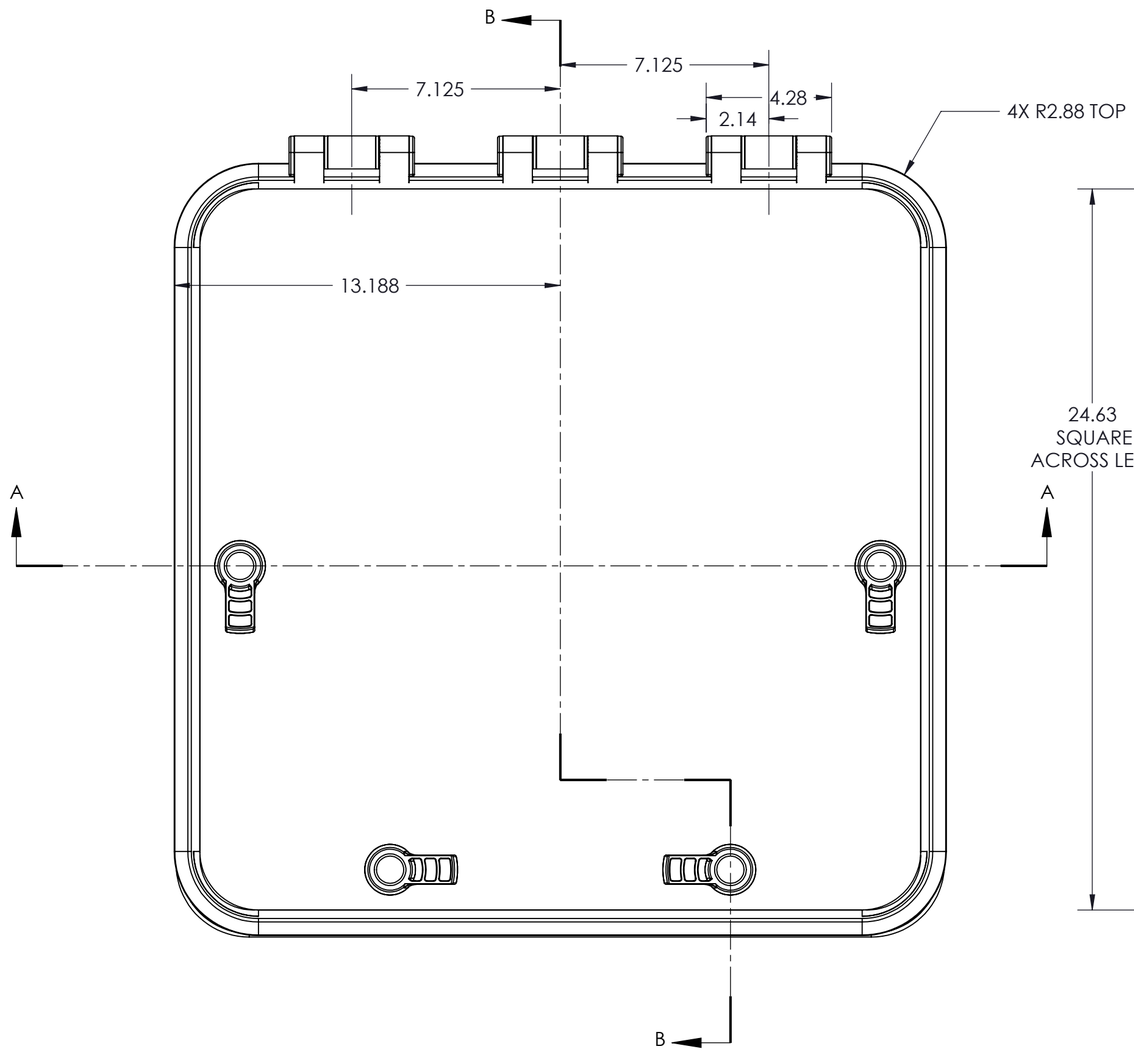

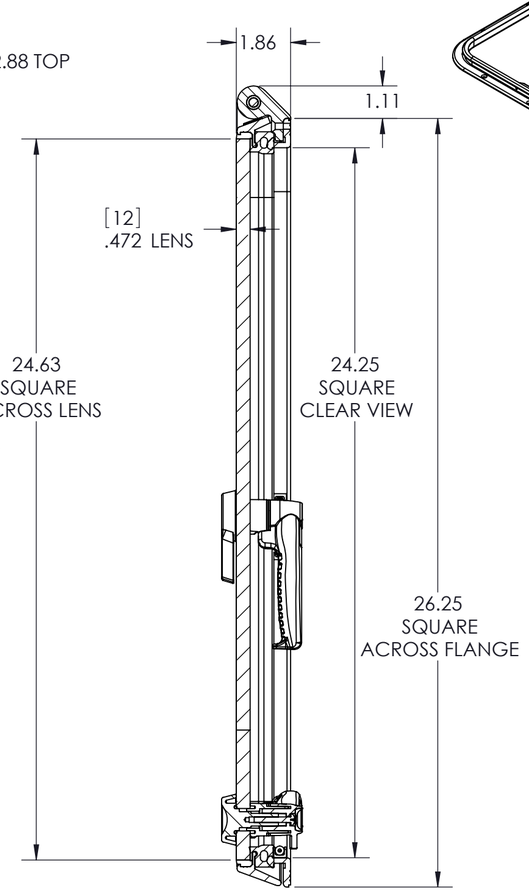

SECTION B-B

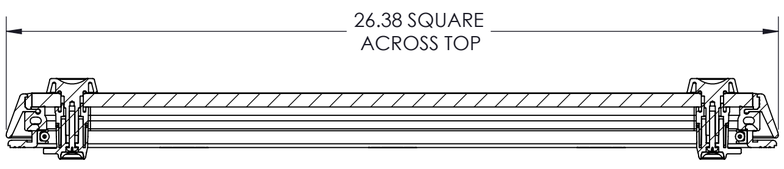

SECTION A-A

SUGGESTED CUTOUT 24-1/2 X 24-1/2
CUTOUT RADIUS 1-11/16
HATCH OPENS 180°

THIS DRAWING IS THE PROPERTY OF POMPANETTE, LLC., CHARLESTOWN, N.H. ALL RIGHTS ARE RESERVED. THIS DRAWING AND INFORMATION MAY NOT BE COPIED OR DISCLOSED TO OTHERS WITHOUT WRITTEN PERMISSION OF POMPANETTE, LLC.

DIV. OF Pompanette INC.
73 SOUTHWEST ST. PO BOX 1200
CHARLESTOWN, N.H. 03603
PH. (603) 826 5791
FAX (603) 826 3074

TOLS. ±1/64 FRACT.	TITLE HI PRO HATCH WITH FRICTION HINGE			
.XXX =±.005 DEC: .XX=±.01	MATL. SEE BOM		DRAWN BY JPERRY	1 OF 1
±1° DEG.	SCALE 1:4	SIZE ©	DATE 1/23/08	PART NO. N2048---FXXIO

S:\Bomar\Dept-Hatch\2000\HI PRO RECTANGLE FRICTION HINGE NON SPIGOT GENERIC